Working Drawings

consist of:

- Detail drawings:
  Show all of the necessary information to manufacture the necessary parts.

- Assembly drawings:
  Show how multiple parts fit together.

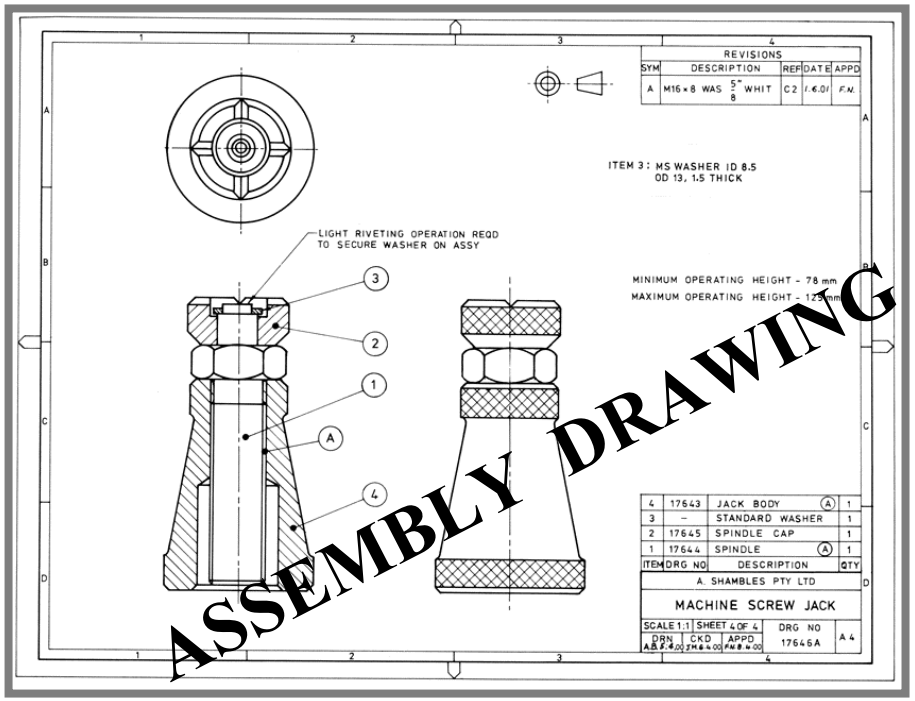

ASSEMBLY DRAWING

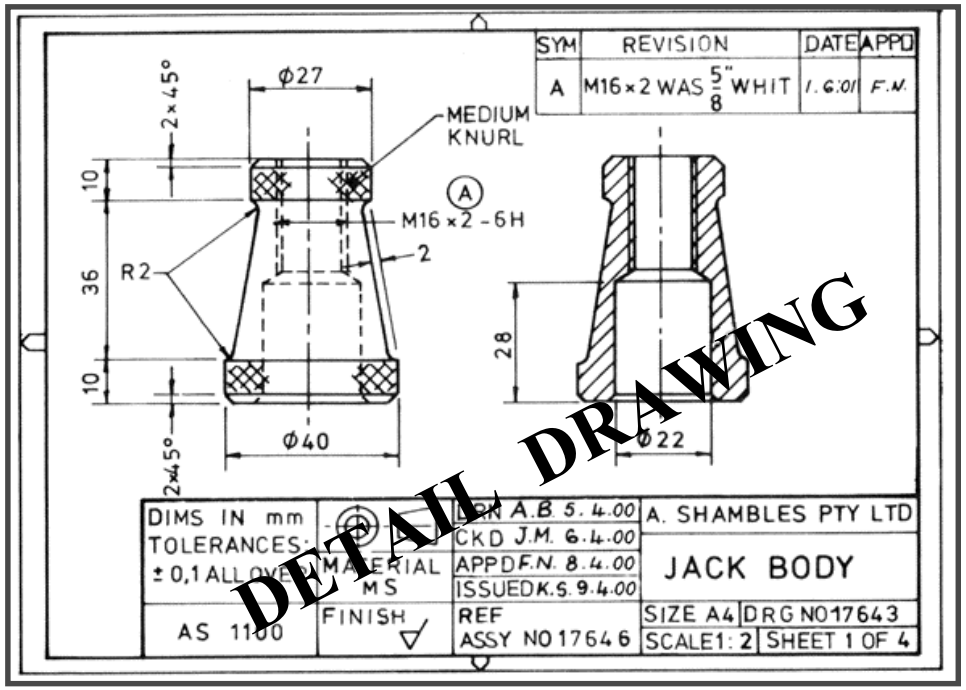

DETAIL DRAWING

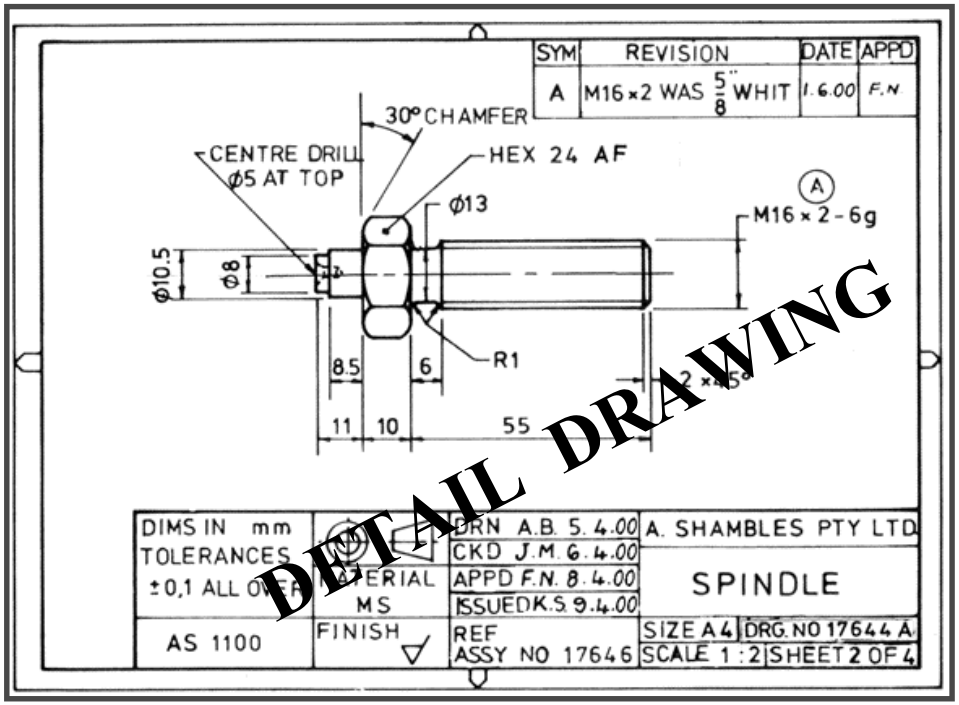

DETAIL DRAWING

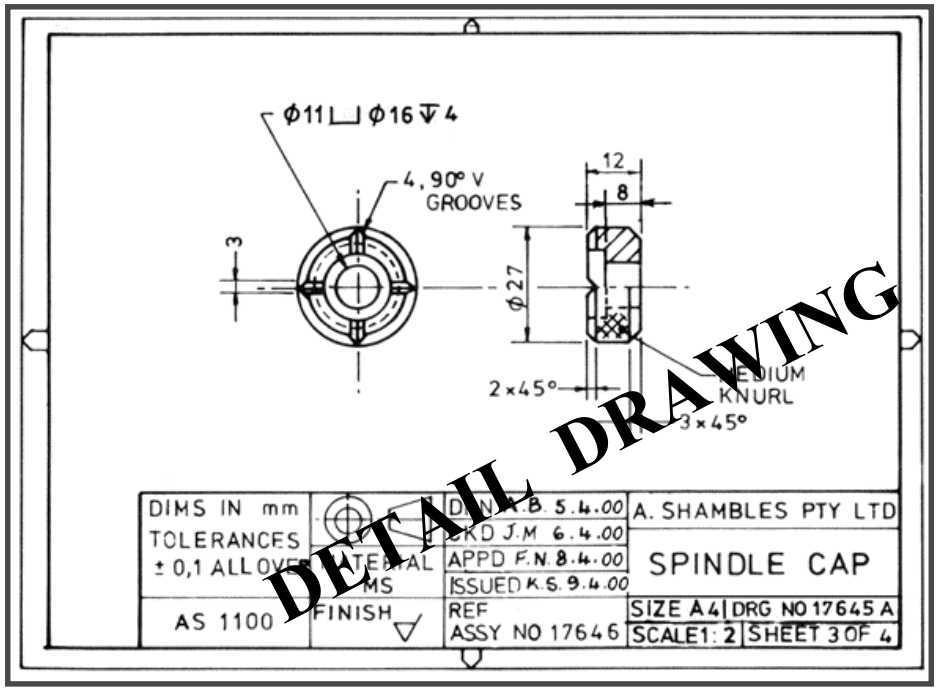

DETAIL DRAWING

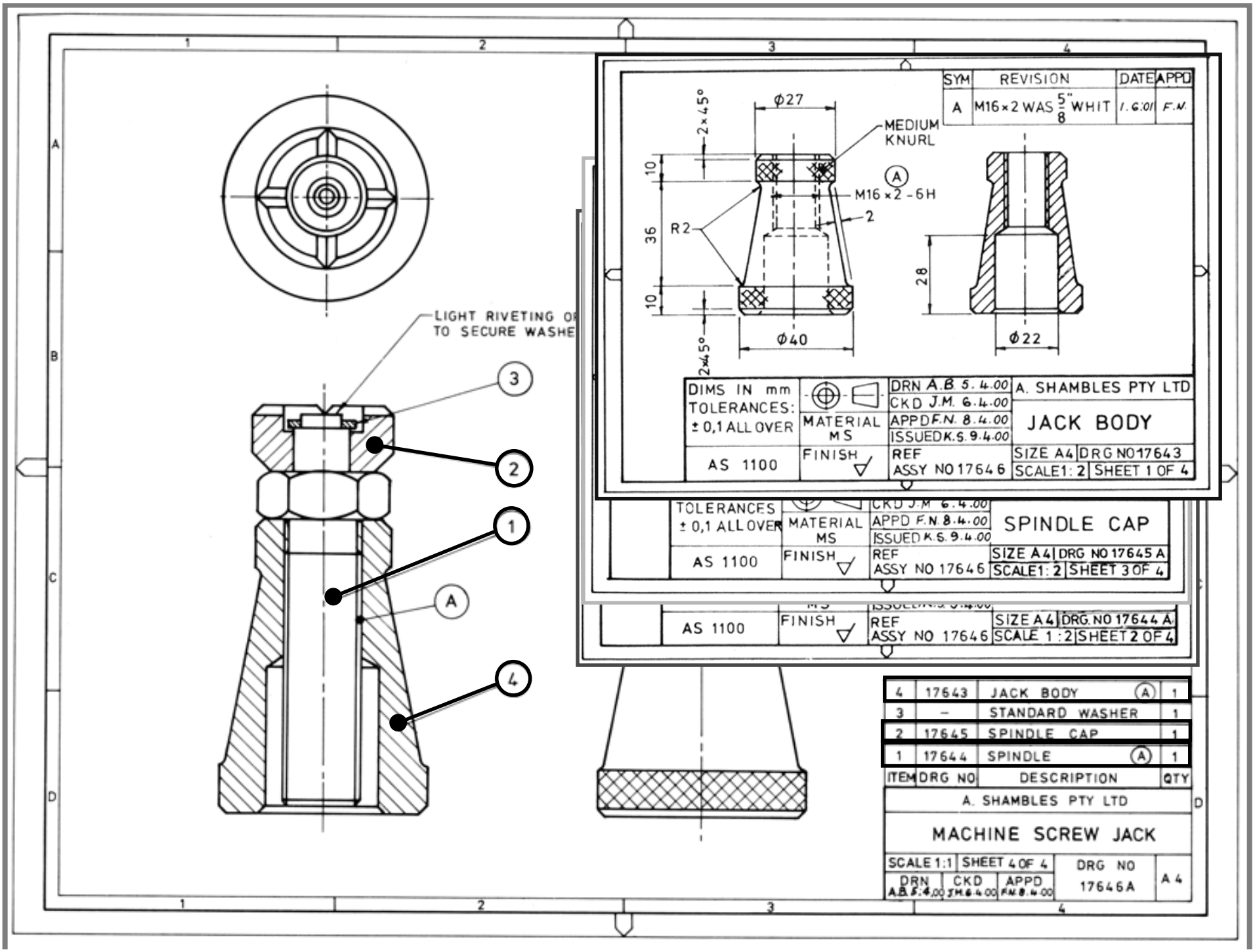
LIGHT RIVETING OF
TO SECURE WASHE
3
2
1
A
4
2×45°
Φ27
MEDIUM KNURL
10
36
10
R2
M16×2-6H
2
28
Φ40
Φ22
2×45°
SYM | REVISION | DATE | APPD
A | M16×2 WAS 5/8" WHIT | 1.6.01 | F.N.
DIMS IN mm
TOLERANCES: ± 0,1 ALL OVER
MATERIAL MS
AS 1100
FINISH
DRN A.B. 5.4.00
CKD J.M. 6.4.00
APPD F.N. 8.4.00
ISSUED K.S. 9.4.00
REF ASSY NO 17646
A. SHAMBLES PTY LTD
JACK BODY
SIZE A4
DRG NO 17643
SCALE 1:2
SHEET 1 OF 4
TOLERANCES ± 0,1 ALL OVER
MATERIAL MS
AS 1100
FINISH
CKD J.M. 6.4.00
APPD F.N. 8.4.00
ISSUED K.S. 9.4.00
REF ASSY NO 17646
SPINDLE CAP
SIZE A4
DRG NO 17645 A
SCALE 1:2
SHEET 3 OF 4
AS 1100
FINISH
REF ASSY NO 17646
SIZE A4
DRG. NO 17644 A
SCALE 1:2
SHEET 2 OF 4
4 | 17643 | JACK BODY (A) | 1
3 | – | STANDARD WASHER | 1
2 | 17645 | SPINDLE CAP | 1
1 | 17644 | SPINDLE (A) | 1
ITEM | DRG NO | DESCRIPTION | QTY
A. SHAMBLES PTY LTD
MACHINE SCREW JACK
SCALE 1:1
SHEET 4 OF 4
DRN A.B. 5.4.00
CKD J.M. 6.4.00
APPD F.N. 8.4.00
DRG NO 17646A
A4

Detail Drawings

This includes multiple views providing the shape description , dimensions and notes, and material specification

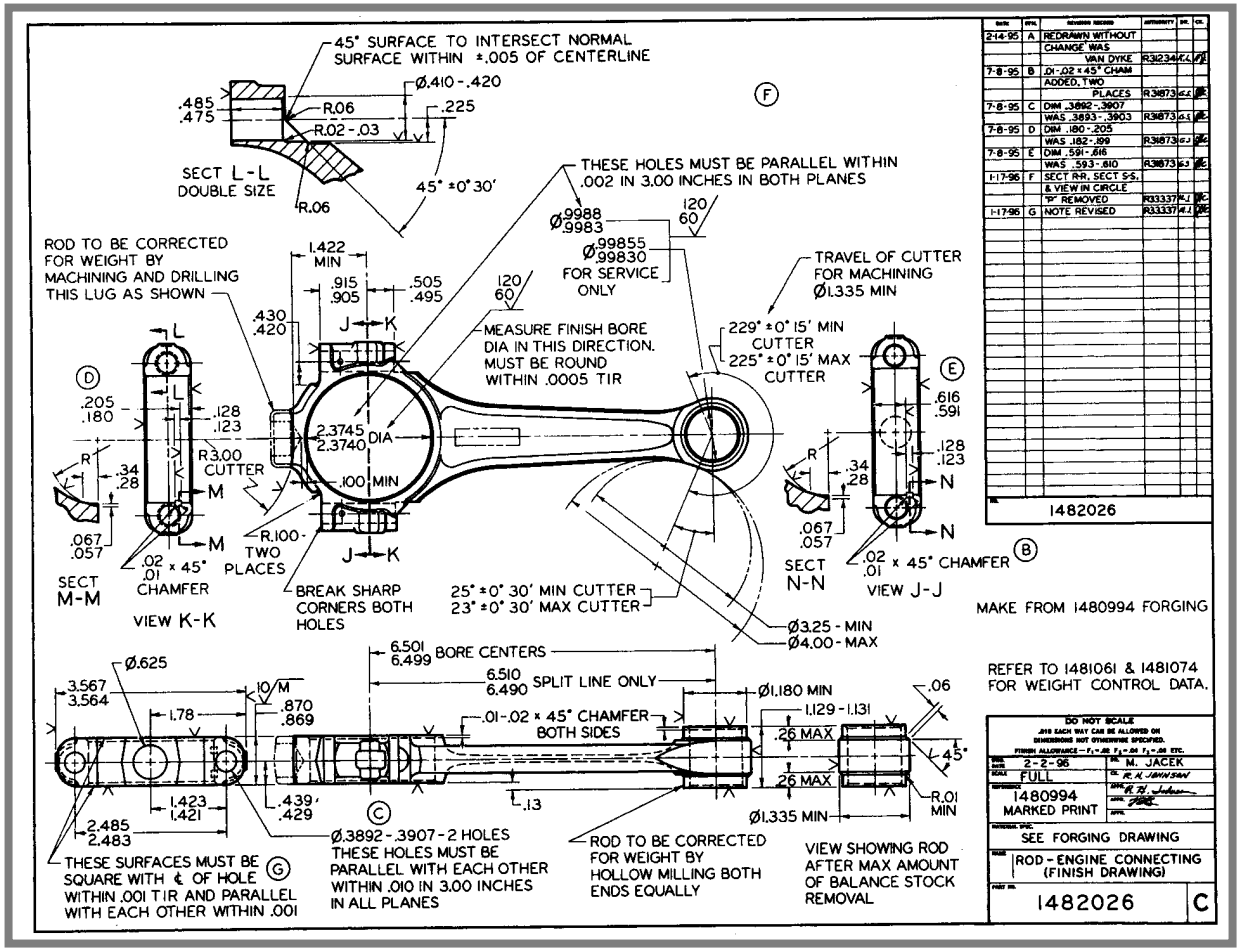

Assembly Drawings

Show the assembled machine or structure, with all detail parts in their functional postitions

- Design assemblies or layouts
- General assemblies
- Working drawing assemblies
- Outline or installation assemblies
- Check assemblies

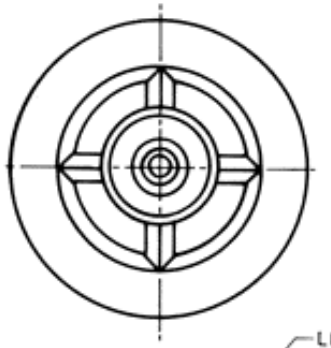

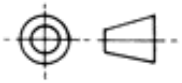

REVISIONS				
SYM	DESCRIPTION	REF	DATE	APPD
A	M16 × 8 WAS $\frac{5}{8}$" WHIT	C2	1.6.01	F.N.

ITEM 3 : MS WASHER ID 8.5
OD 13, 1.5 THICK

LIGHT RIVETING OPERATION REQD
TO SECURE WASHER ON ASSY

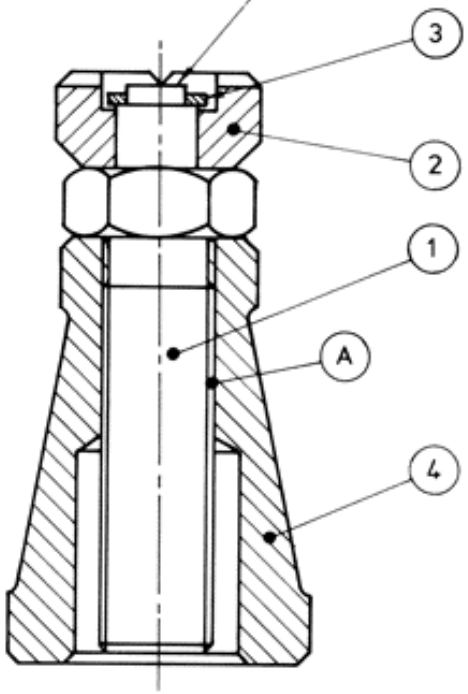

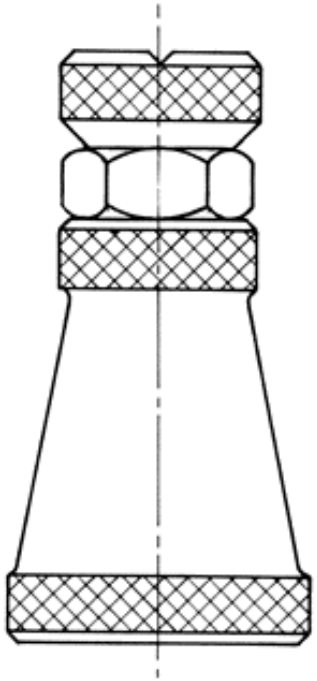

MINIMUM OPERATING HEIGHT - 78 mm

MAXIMUM OPERATING HEIGHT - 125 mm

ITEM	DRG NO	DESCRIPTION	QTY
4	17643	JACK BODY (A)	1
3	–	STANDARD WASHER	1
2	17645	SPINDLE CAP	1
1	17644	SPINDLE (A)	1

A. SHAMBLES PTY LTD

MACHINE SCREW JACK

SCALE 1:1	SHEET 4 OF 4		DRG NO	A4
DRN	CKD	APPD	17646A	
A.B. 5.4.00	J.M. 6.4.00	F.N. 8.4.00		

Part Lists of Assembly Drawings

For A1, A2, A3, A4 size sheets.

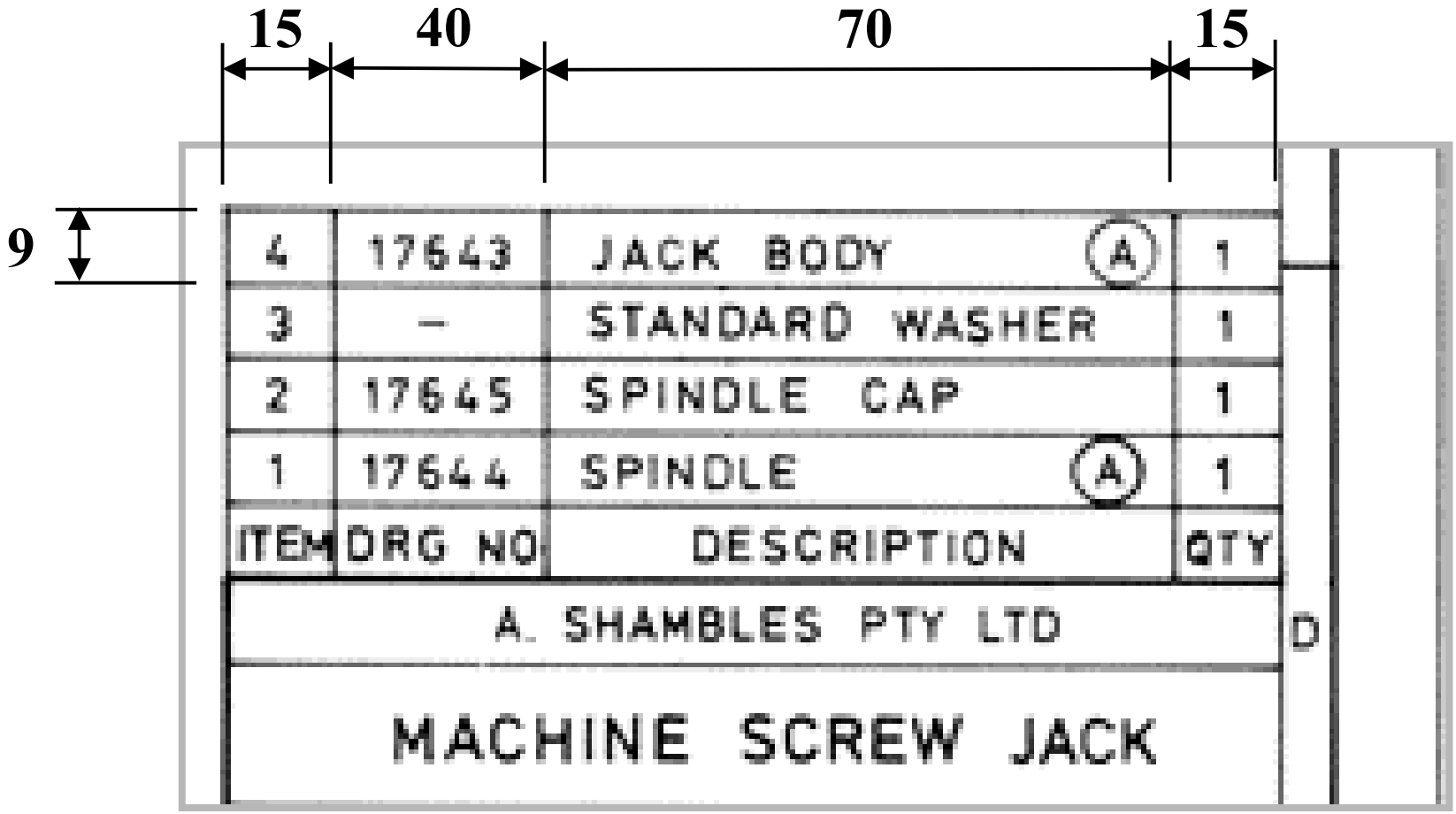

Assembly Parts

The combination or ‘fitting together’ of components designed to perform a specific mechanical function.

Each component has a finished size which lies within a specified tolerance.

Two types of assemblies:

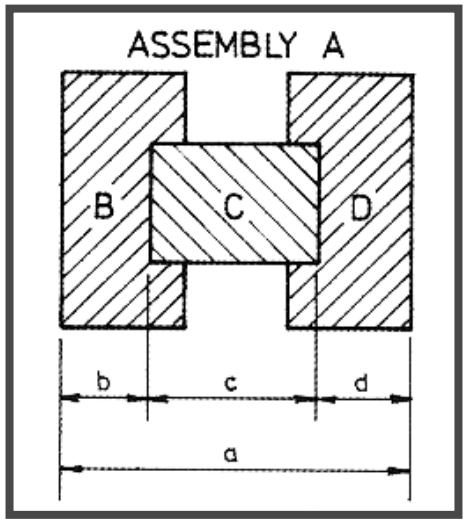

External assembly

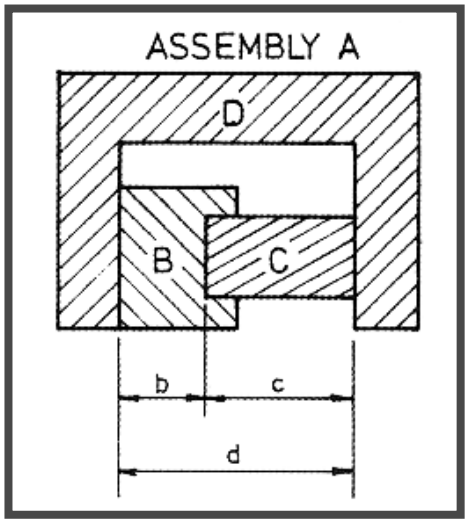

Internal assembly

Tolerances

Tolerances should be specified in the case where a dimension is critical to proper functioning of a component.

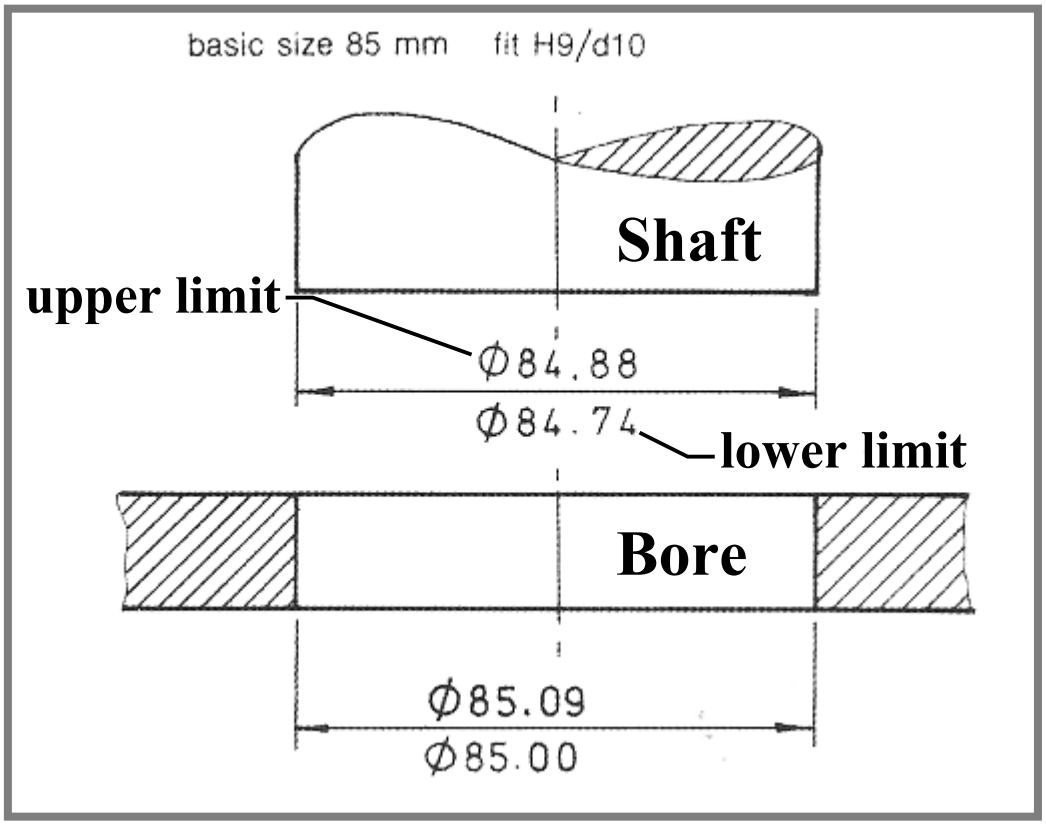

Individual Tolerances

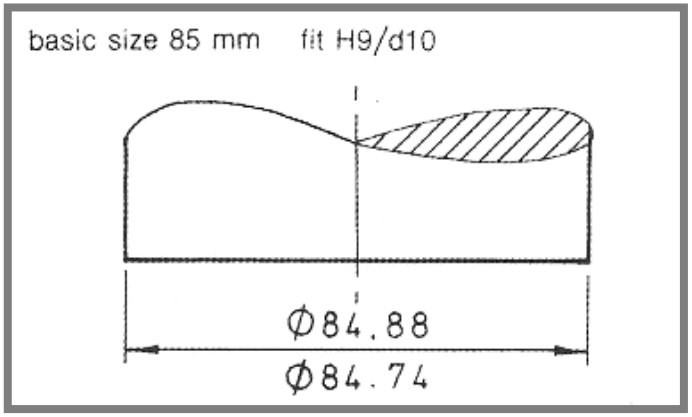

Limits of size

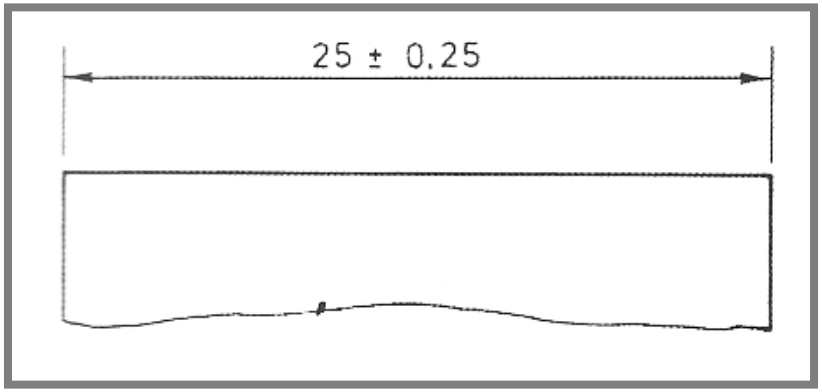

Bilateral tolerances

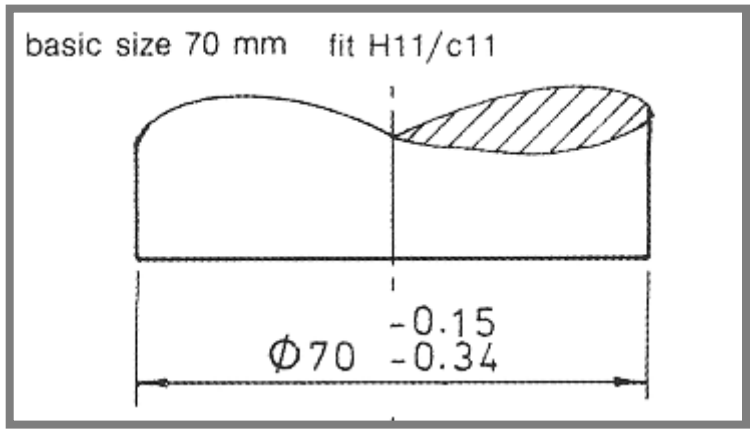

Unilateral tolerances

Assembly Tolerances

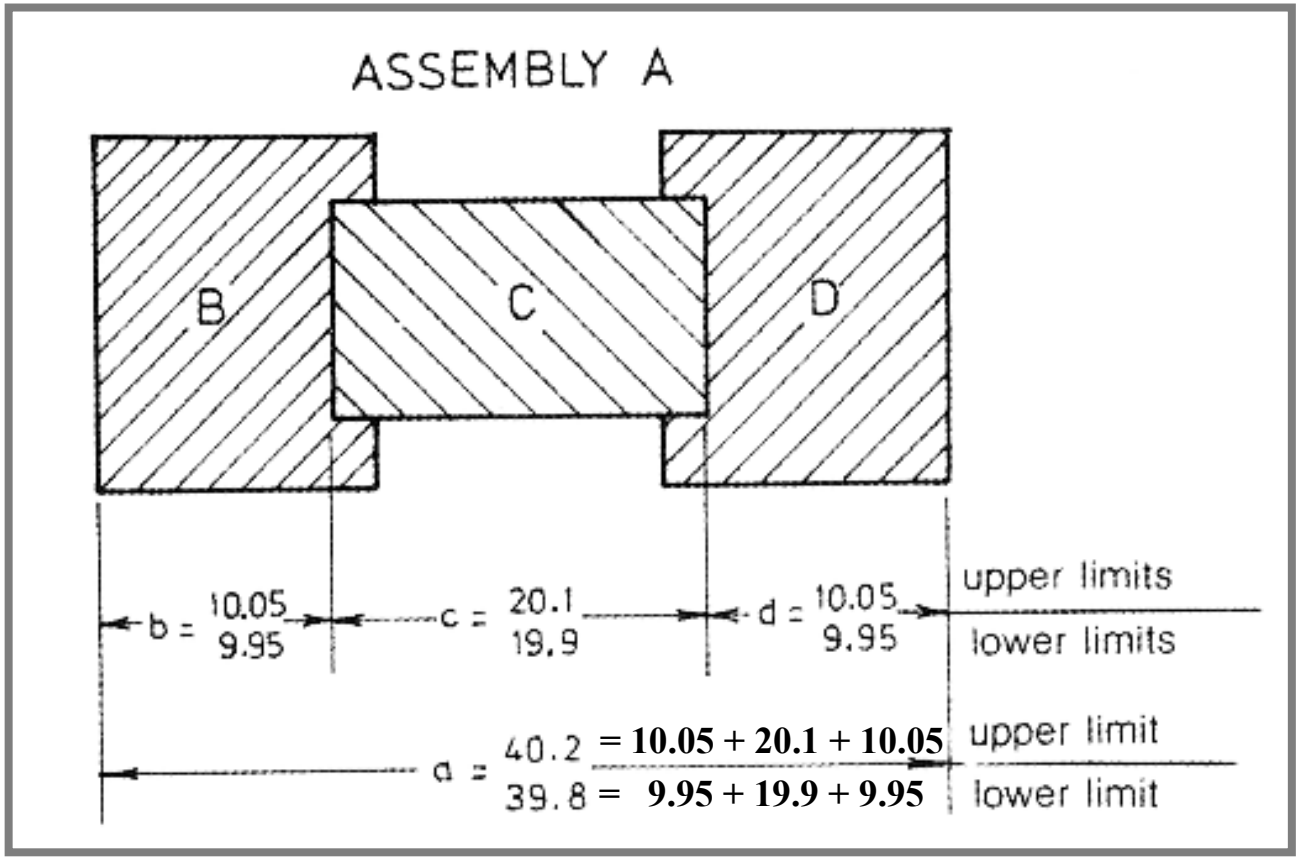

External Assembly

Assembly Tolerances

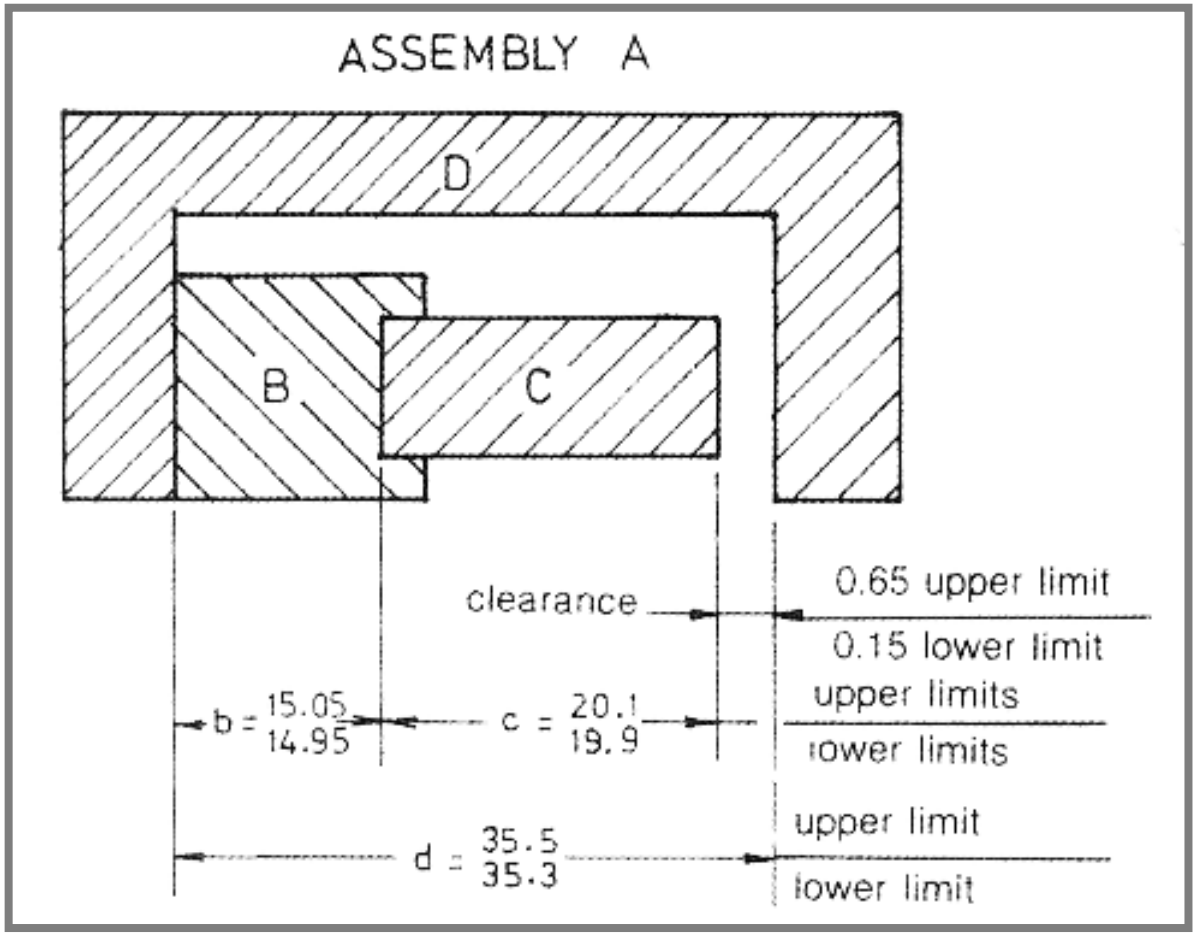

Internal Assembly

Examples

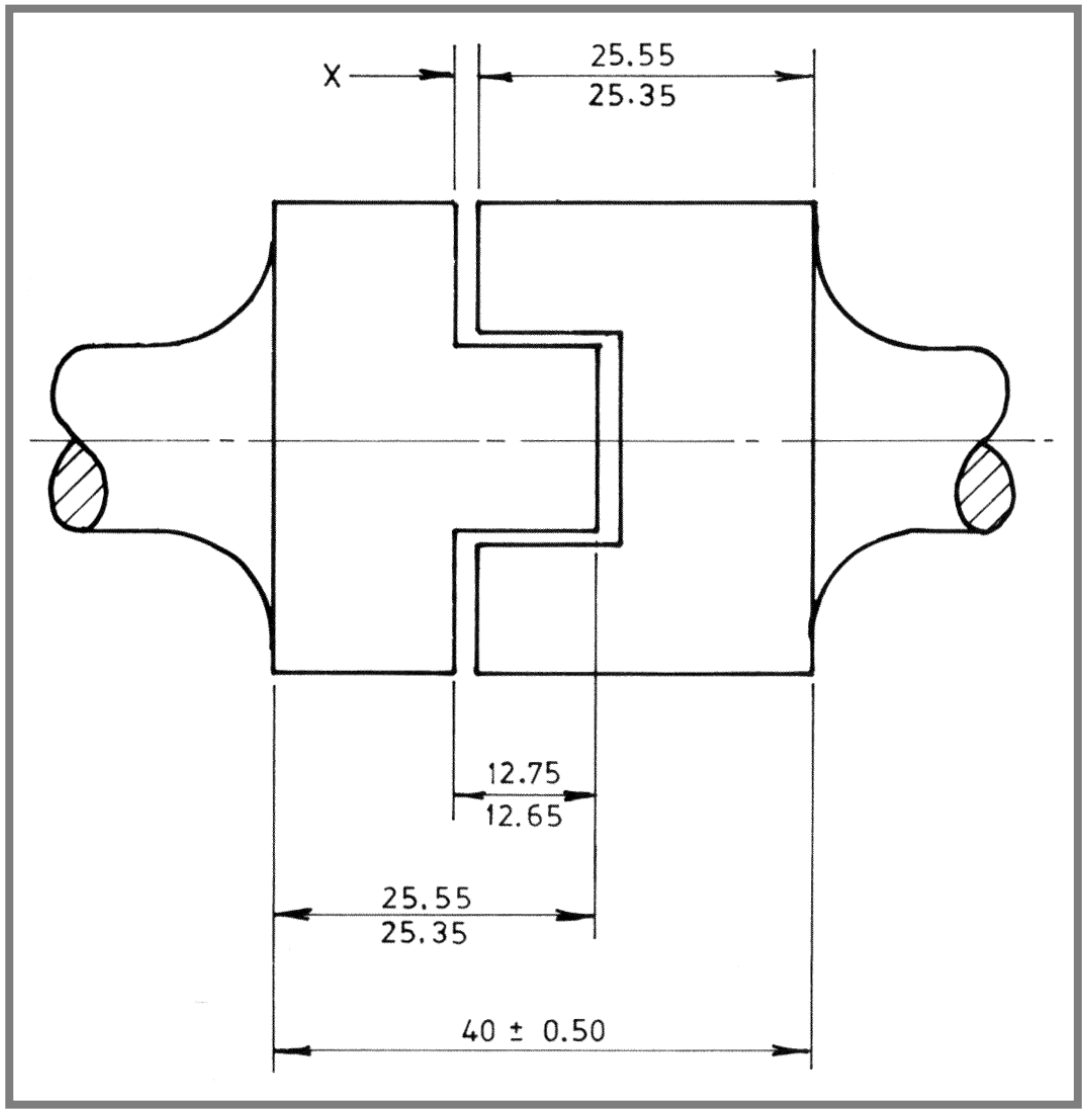

SCREW THREADS

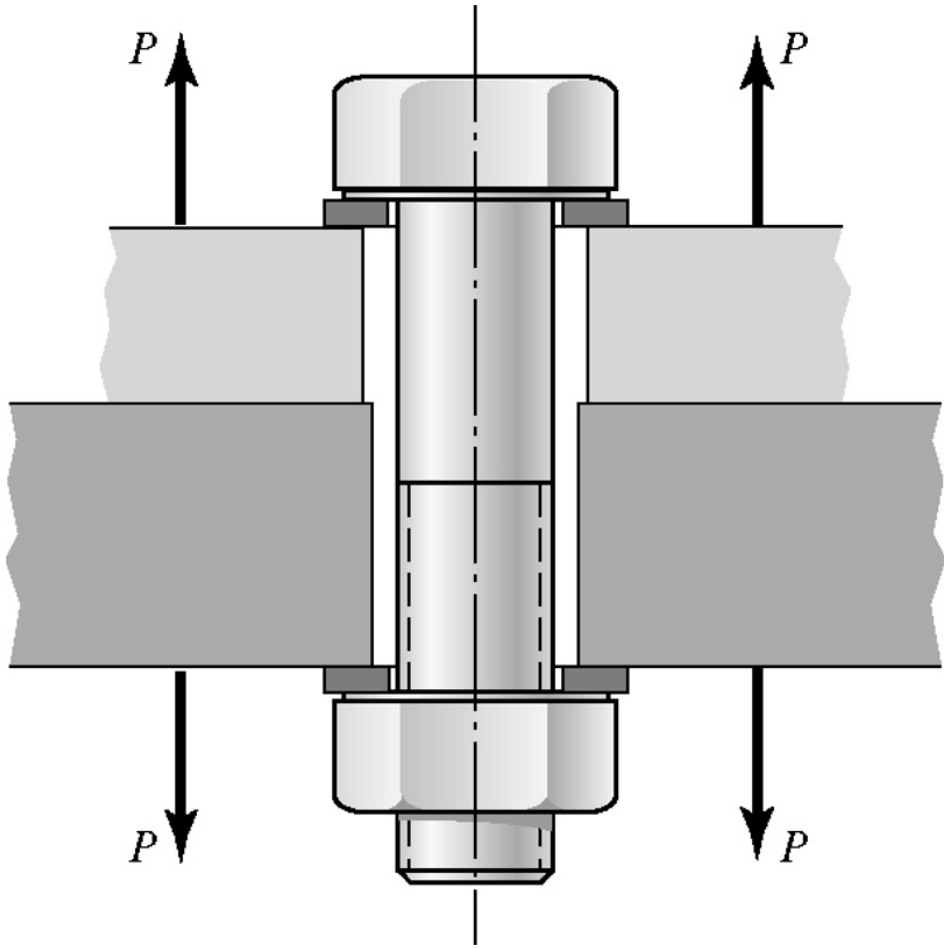

SCREW THREADS

Fig. 1 **Detailed Metric, American National, and Unified Threads.**

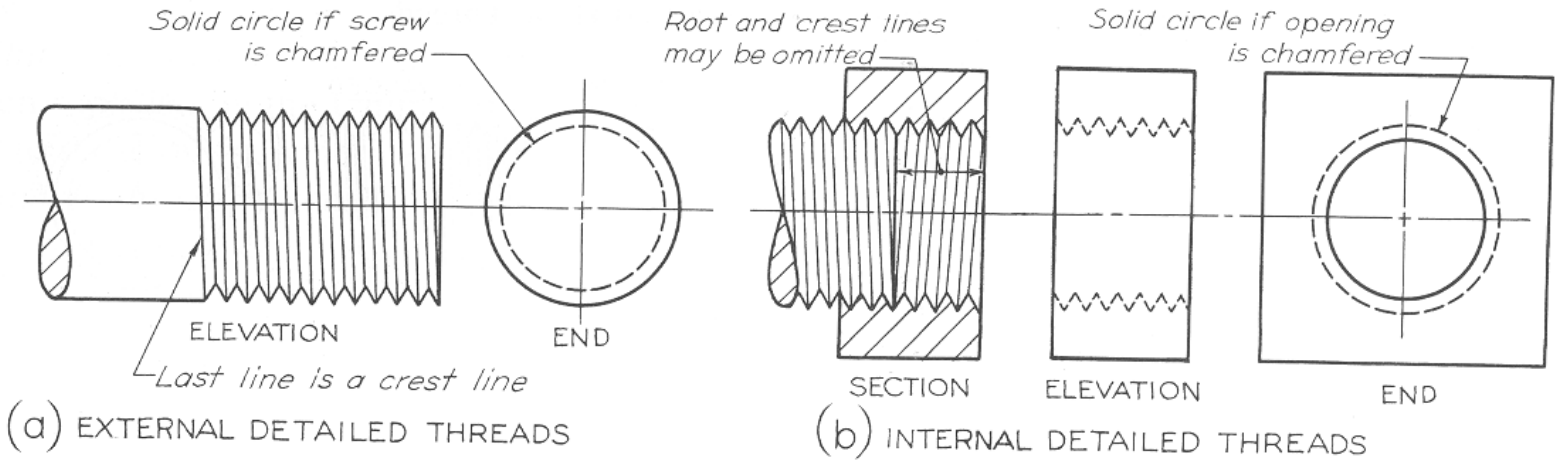

Fig. 2 **External Thread Symbols.**

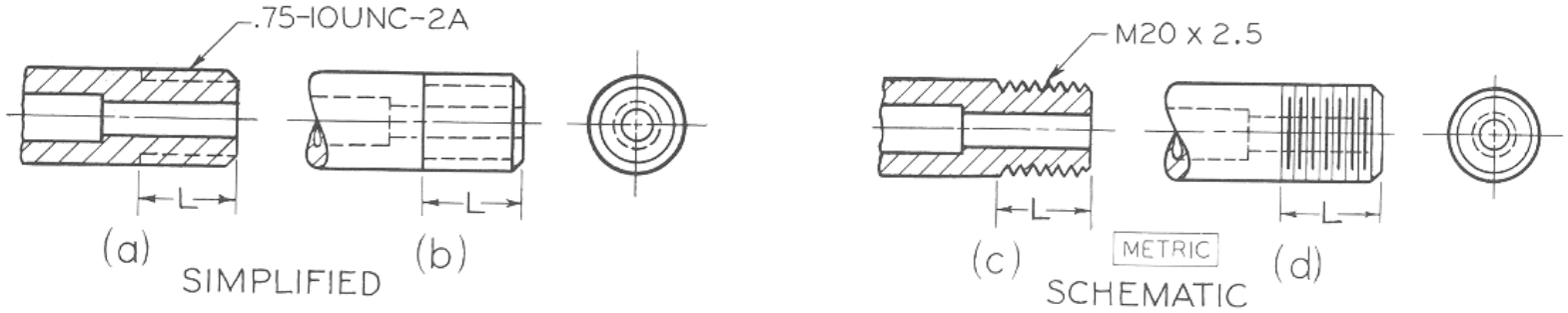

SCREW THREADS

MAJOR DIAMETER	#5 (.125) TO #12 (.216)	.25	.3125	.375	.4375	.5	.5625	.625	.6875	.75	.8125	.875	.9375	1.
DEPTH, D	.03125	.03125	.03125	.0468	.0468	.0625	.0625	.0625	.0625	.0781	.0937	.0937	.0937	.0937
PITCH, P	.0468	.0625	.0625	.0625	.0625	.0937	.0937	.0937	.0937	.125	.125	.125	.125	.125

(For metric values: 1" = 25.4 mm or see inside front cover.)

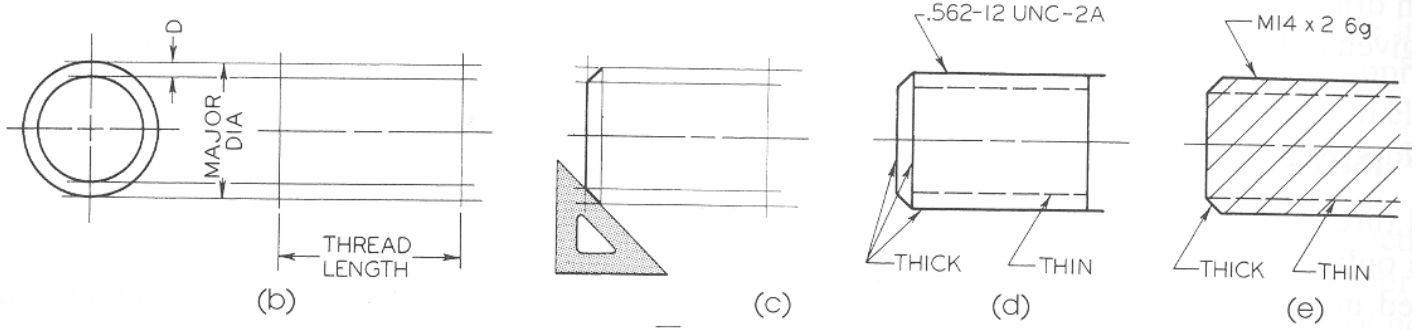

SIMPLIFIED – EXTERNAL

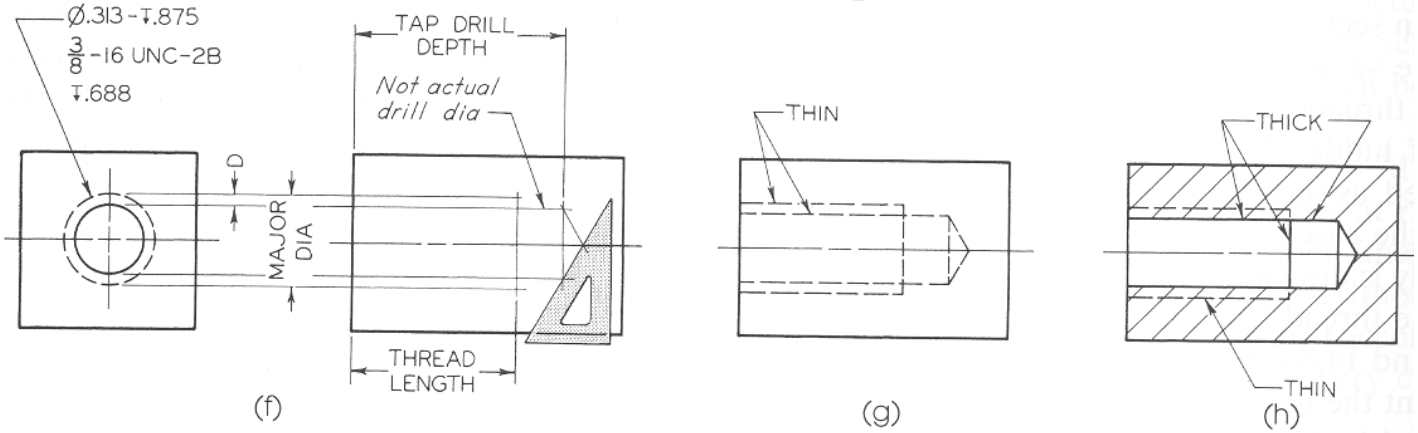

SIMPLIFIED – INTERNAL

SCREW THREADS

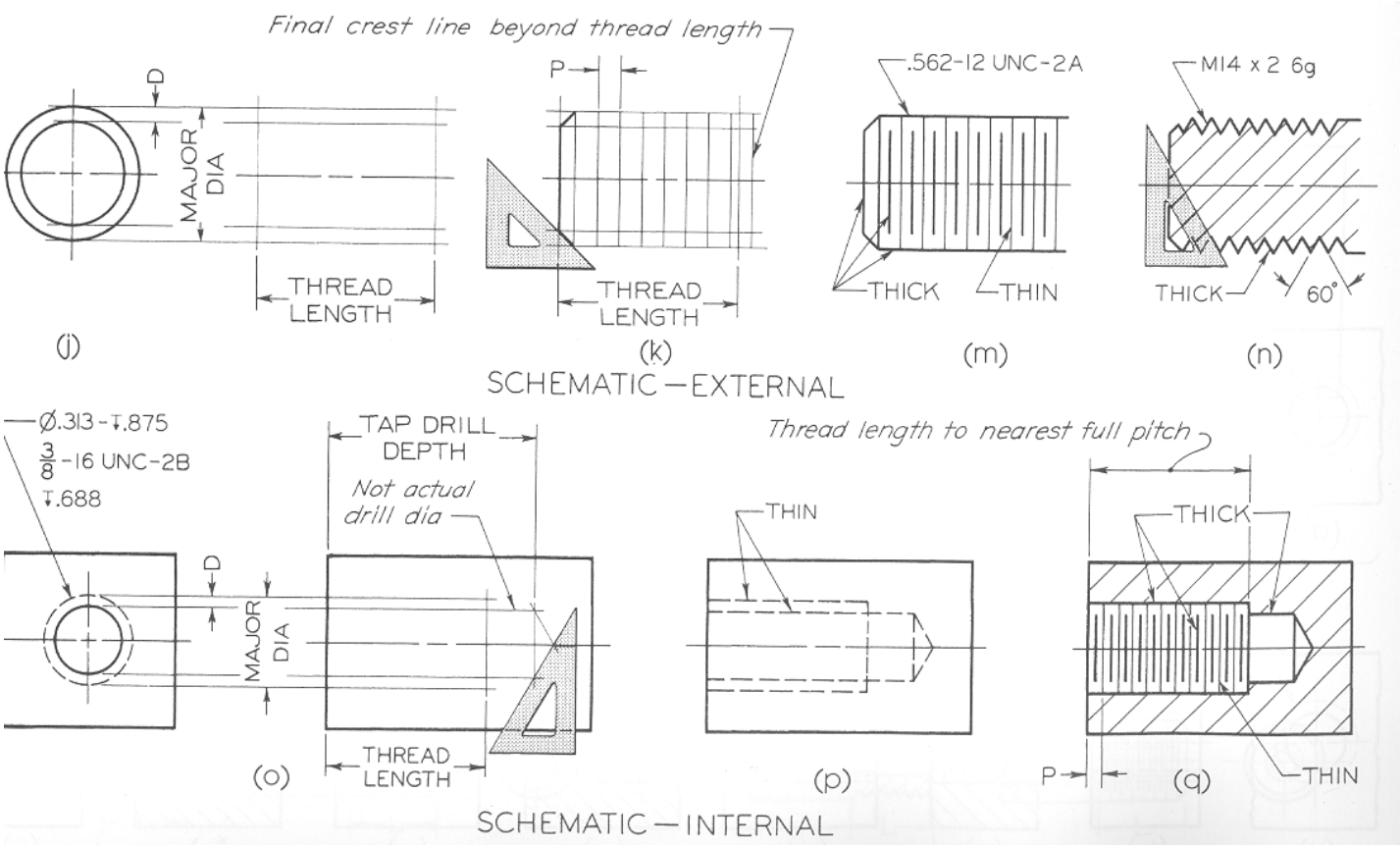

SCREW THREADS

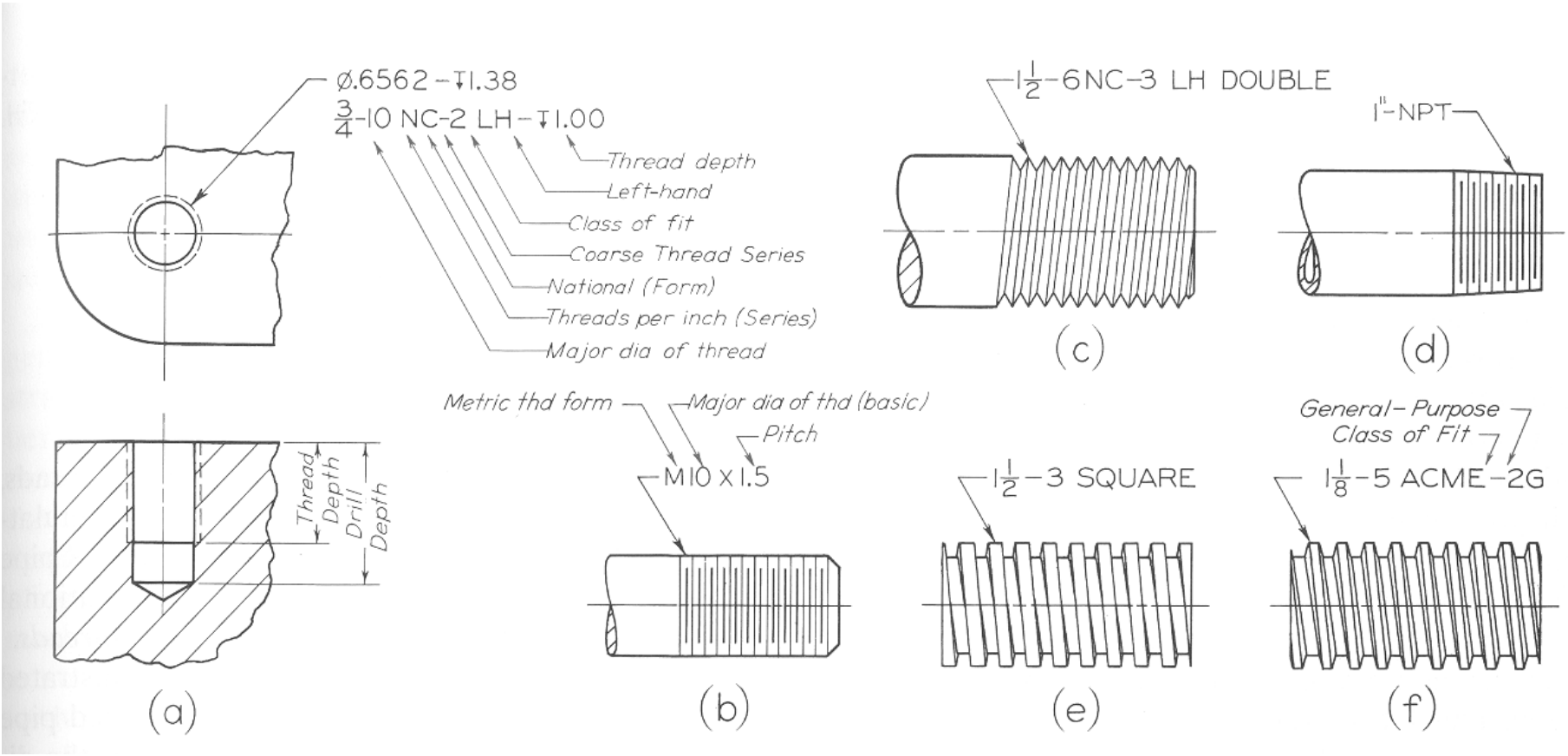

SCREW THREADS

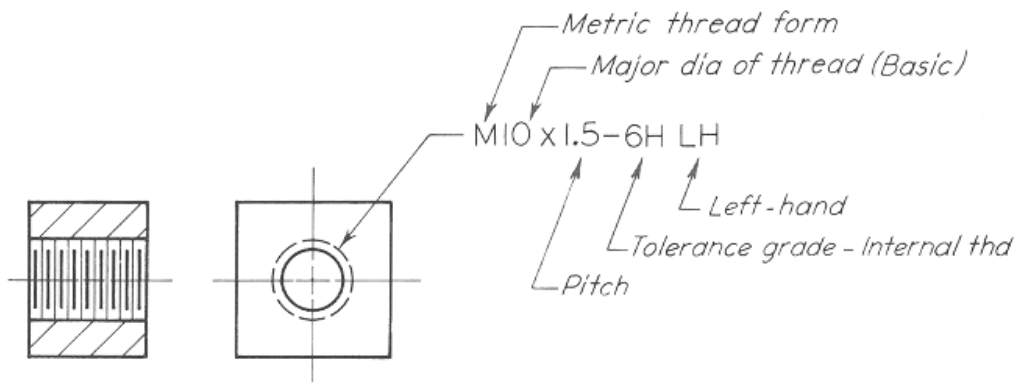

(g) INTERNAL THREAD - METRIC

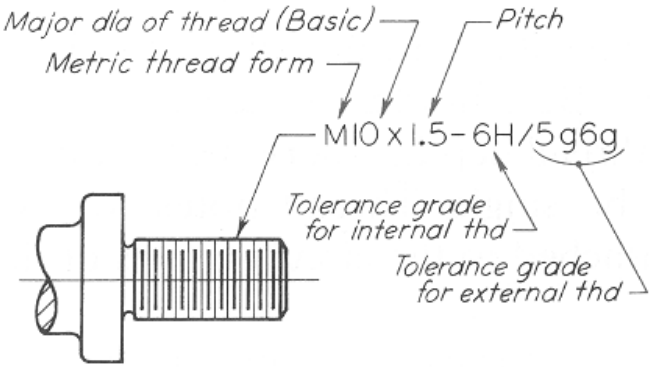

(h) EXTERNAL THREAD - METRIC

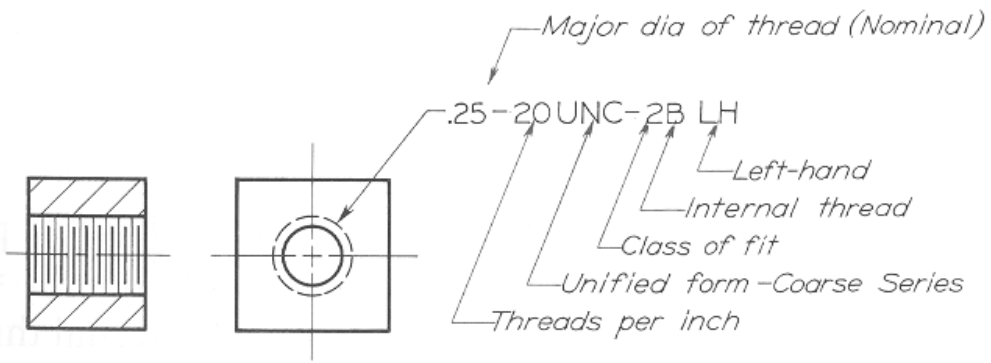

(i) INTERNAL THREAD *Unified*

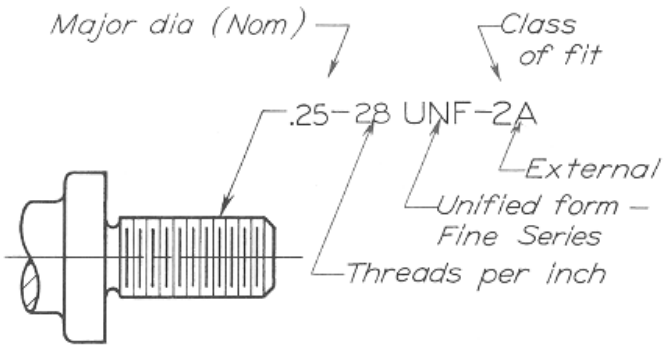

(j) EXTERNAL THREAD *Unified*